PATENT SPECIFICATION

630,726

Application Date: June 28, 1934. No. 19157/34.
" " July 4, 1934. No. 19721/34.

One Complete Specification left (under Section 16 of the Patents and Designs Acts, 1907 to 1946): April 9, 1935.

Specification Accepted: March 30, 1936 (but withheld from publication under Section 30 of the Patent and Designs Acts 1907 to 1932)

Date of Publication: Sept. 28, 1949.

Index at acceptance: —**Class 39(iv)**, P(1:2:3x).

PROVISIONAL SPECIFICATION
No. 19157 A.D. 1934.

Improvements in or relating to the Transmutation of Chemical Elements

I, LEO SZILARD, a citizen of Germany and subject of Hungary, c/o Claremont Haynes & Co., of Vernon House, Bloomsbury Square, London, W.C.1, do hereby declare the nature of this invention to be as follows:—

This invention has for its object the production of radio active bodies the storage of energy through the production of such bodies and the liberation of nuclear energy for power production and other purposes through nuclear transmutation.

In accordance with the present invention nuclear transmutation leading to the liberation of neutrons and of energy may be brought about by maintaining a chain reaction in which particles which carry no positive charge and the mass of which is approximately equal to the proton mass or a multiple thereof form the links of the chain.

I shall call such particles in this specification " efficient particles."

A way of bringing about efficiently transmutation processes is to build up transmutation areas choosing the composition and the bulk of the material so as to make chain reactions efficient and possible, the links of the chain being " efficient particles."

One example is the following. The chain transmutation contains an element C, and this element is so chosen that an efficient particle x when reacting with C may produce an efficient particle y, and the efficient particle y when reacting with C may produce either an efficient particle x or another efficient particle which in its turn is directly or indirectly when reacting with C capable of producing x. The bulk of the transmutation area, on the other hand, must be such that the linear dimensions of the area should sufficiently exceed the mean free path between two successive transmutations within the chain. For long chains composed of, say, 100 links the linear dimensions must be about ten times the mean free path.

I shall call a chain reaction in which two efficient particles of different mass number alternate a " doublet chain." An example for a doublet chain which is a neutron chain would be the following reaction, which might be set up in a mixture of a " neutron reducer element " (like lithium (6) or boron (10) or preferably some heavy " reducer " element), and a " neutron converter element " which yields $n(2)$ when bombarded by $n(1)$. An example for such a chain in which carbon acts as reducer and beryllium acts as converter would be the following:

$$C(12) + n(2) = C(13) + n(1)$$
$$Be(9) + n(1) = \text{" } Be(8) \text{ "} + n(2)$$

(" Be(8) " need not mean an existing element, it may break up spontaneously).

One can very much increase the efficiency of the hitherto mentioned neutron chain reactions by having a " neutron multiplicator " O mixed with the elements which take part in the chain reaction. A neutron multiplicator is an element which either splits up $n(2)$ into $n(1) + n(1)$ or an element which yields additional neutrons for instance $n(1)$ when bombarded by $n(1)$. A multiplicator need not be a meta-stable element. Beryllium may be a suitable multiplicator

$$Be(9) + n(1) = \text{" } Be(8) \text{ "} + n(1) + n(1)$$

An efficient particle disappears (and a

chain is therefore interrupted if this happens in a chain reaction) if a neutron reacts with a nucleus in such a way that the neutron disappears and a positive particle for instance a proton or an alpha particle is emitted. I can suppress the production of a positive particle when bombarding the element by neutrons by choosing the element and the neutron energy so that the positive particle, the creation of which has a potential possibility, should not have sufficient energy at its disposal to penetrate in the inverse process the nucleus of that element. In order to avoid such an occurrence in my chain reactions I shall use as reducers, converters and multiplicators the heaviest elements which are otherwise satisfactory.

In the accompanying drawings Figure 1 and 2 show one example for utilising neutron chains for power production and the generation of radio-active bodies. 101 is a high voltage positive ray tube generating fast light ions like diplons or helium ions which cause by striking diplogen or beryllium in 102 the emission of a penetrating radiation (neutrons). The radiation emerging from 102 acts on the material 103 which forms a sphere around 102. This material is such that a chain reaction, preferably accompanied by the action of a multiplicator is released. For instance one can have a sphere 103 the dimensions of which are so chosen that the energy liberated in it should be a multiple of the energy input. The pumps 120, 121 and 122 pump a liquid for instance water or mercury through the pipe systems 107, 110, 111 thereby cooling the transmutation area 103 and driving the heated liquid through the boiler 126. The boiler supplies steam to a power plant. The neutrons emerging from the sphere 103 act on a layer 104 which is composed of an element T that will transmute into a radio-active body which is suitable for the storage of energy. The element T need not be present as a free element but can preferably be present in the form of a compound soluble in water; that makes it easier to separate the radio active bodies formed in the process. A third layer 105 contains an element V that will absorb the neutrons /n(1)/ under liberation of energy (Li). 106 is a heat insulating layer.

Dated this 28th day of June, 1934.

LEO SZILARD.

PROVISIONAL SPECIFICATION
No. 19721 A.D. 1934.

Improvements in or relating to the Transmutation of Chemical Elements

I, LEO SZILARD, citizen of Germany and Subject of Hungary, c/o Claremont, Haynes & Co., of Vernon House, Bloomsbury Square, London, W.C.1, do hereby declare the nature of this invention to be as follows:—

The invention relates to a process and to apparatus adapted for power production, the storage of power through the generation of radio-active bodies, and the generation of radio-active bodies in general by means of the generation of neutrons (particles which carry no charge and the mass of which is roughly equal to the mass of a proton or a multiple thereof). If I use the name "efficient particles" I mean neutrons or other particles (the mass of which is roughly equal to the mass of the proton or a multiple thereof) which carry no positive charge and are efficient either because they can travel a long way through matter without being stopped like neutrons or they have a shorter range but are able to react with a positive nucleus after having been stopped. I shall discus both the generation of efficient particles and also their use in chain reactions.

In accordance with the present invention a chain reaction leading to the liberation of neutrons and of energy is maintained in a body, the geometrical proportions of which are so chosen that a good efficiency of the process be obtained, through the introduction of an initial radiation, for instance a neutron radiation.

According to one feature of the invention such a neutron radiation is generated through the action of X-rays on matter.

According to another feature of the invention such a neutron radiation is generated through the action of fast cathode rays on matter.

Neutrons are liberated from same elements, for instance beryllium, if they are exposed in an electric discharge to the action of electrons. For instance if we expose them to the action of cathode rays of a couple of million volts neutrons are liberated from beryllium.

Instead of exposing the substance which I wish to transmute to the direct action of the electron I shall in some cases expose it to the action of the penetrating radiation which is generated if

electrons travel through matter especially through heavy elements like Bi, Pb, Hg, Th, U etc.

In the accompanying drawings.

Figure 1 shows an arrangement suitable for the production of fast electrons. 1 is the primary of a transformer, the secondary 2 of which is connected to the points 3 and 4. 3 is connected to the cathode 8 of the rectifier tube 5 and to the anode 7 of the rectifier tube 6. Point 4 is connected to the cathode 9 of the rectifier tube 10 and to the anode 11 of the rectifier tube 12. The cathodes 13 and 14 are connected to each other and to the earth. The anodes 15 and 16 are connected to point 17, and this point is connected to the pole 18 of the impulse generator 20, the pole 19 of which is connected to earth. The impulse generator 20 is built of condensers 21, resistances 22 and spark gaps 23.

This impulse generator is adapted to produce intermittant voltage up to 10 million volts, transmitted to the discharge tube 24 through the spark gap 25. 26 is the cathode of the discharge tube, the anode 27 of which is connected to the earth. The fast electrons emerge through the metal window 27 (which is the anode as well) and are hitting a body 28.

Figure 2 shows how the radiation emitted by a body 28 (in Figure 1) which is exposed to the action of fast electrons can act as the initial radiation for a chain reaction. In Figure 2, 1 is an electrical discharge tube which generates fast electrons. These electrons enter through the narrow tube 2 into the interior of a spherical layer 3 which is formed by a substance in which a chain reaction can be maintained, the links of the chain being efficient particles, in the presence of an initial radiation emitted by 28. The tube 2 is evacuated and the electrons emerge from it through the window (a thin aluminium sheet) 4. The space 5 in the interior of the spherical layer 3 can be evacuated. If the voltage of the cathode rays hitting 28 is sufficient to liberate neutrons from 28, (for instance if one uses voltages of about or over one million volt and uses diplogen or compounds of diplogen for instance a diplogen-lithium compound to form the body 28) one gets a neutron radiation as initial radiation which can maintain a chain reaction in the layer 3. It is essential to prevent that neutrons should easily escape from the space 5 through the discharge tube 1 and it may therefore be necessary to surround the whole discharge tube with a wall, the thickness of which may be, if necessary, several meters. If this wall is built from a material containing heavy elements which have a large cross-section for neutron collisions the thickness of the wall may be less than for a wall built of light elements.

If I use instead of a cathode ray tube a tube which ejects fast diplons or helium ions I can also generate an initial radiation of neutrons if I expose to those ions a body 28 (in Figure 2) which is composed of diplogen or beryllium, and can in certain cases prefer this is as an alternative solution.

An essentially different way of introducing the initial radiation into the chain reaction chamber is the arrangement shown in Figure 3. 401 is the cathode ray tube described in Figure 1. 402 is a sheet of a heavy element for instance Pb, or U in which a penetrating radiation (hard X-rays) is generated with good efficiency if the electrons have a voltage about or over one million volt. This efficiency increases very rapidly with the voltage, and is much higher than it could be expected from the experience based on ordinary X-ray work. The thickness of the sheet 402 is such as to enable the generated penetrating radiation to penetrate through this sheet and act on the transmutation chamber 106 (in Figure 4). Nevertheless the sheet can be sufficiently thick to utilise more than half of the energy of the cathode rays. The X-rays emerging from sheet 402 penetrate the layer 3 and can liberate efficient particles either from the layer 3 or from a substance 407 placed in the interior of the layer 3. The heat liberated in 3 and 407 of Fig. 4 can be utilised as shown in Fig. 2, 3 and 407 forming the interior of the transmutation chamber 106. These neutrons can then maintain a chain reaction as discussed further above and further below. The advantage of using X-rays as an initial radiation is the following: the X-rays penetrate through a perfectly closed layer 3 into the interior of the layer and therefore a leak of neutrons from the interior can be avoided. This is specially important if one has to deal with a neutron chain in which no multiplicator action is involved. In such cases X-rays may be used with advantage as initial radiation especially in view of the unexpectedly large efficiency of the X-ray production by means of fast electrons acting on heavy elements.

Figure 2 shows features some of which are needed in neutron chains. The layer 3 contains some suitable elements to maintain a chain. I refer to Figure 2 of my application 19157/34 in which 107, 108, and 109 form a tube system through which water or mercury is circulated by means of the pump 120. The liquid leav-

ing 109 is lead through a boiler 126 in the tube system 123 and transmits its heat to the boiler, the steam produced being used for power production. Another tube system 110 is operated by the pump 121 and is heated by the layer 9 composed of a material which will transmute into a radio-active body under the influence of the radiation emerging from layer 3. Pump 122 pumps liquid through 11 along the outer surface of the transmutation area and through the boiler 126 through the pipe system 125.

If I have a chain reaction with a multiplicating action i.e. if the number of efficient particles increases along the chain I can reach very high efficiency for the production of heat or radio-active bodies. If I have a closed spherical layer of material in which the chain reaction takes place the inner radius (r_1) of which is large as compared with the mean free path (a) of the efficient particles which maintain the chain, the density (s) of the efficient particle will with good approximation be given as a function of the radius (r) by the following equation:

$$D\ d(rs)/dr + A(rs) = 0$$

D and A are determined by: the mean free path of the efficient particles a; the mean velocity of the efficient particles w; the factor of the multiplicating action f which says how many collisions of an efficient particle are needed in the average in order to produce one new efficient particle.

$$A = w/af;\ D = aw\ 3;\sqrt{\frac{D}{A}} = \frac{a\sqrt{b}}{\sqrt{3}}$$

I am interested in the critical thickness l of the spherical layer for which the gradient of the density s vanishes. If the thickness $(r_2 - r_1)$ approaches l I can maintain with a very weak source of initial radiation in the interior of the inner surface of the spherical layer a very strong chain reaction and I can easily get one thousand or more times more efficient particles emerging from the chain reaction layer than the number of the efficient particles forming the initial radiation. If the outer surface $(r = r_2)$ of the spherical layer were to stand free in space the density s would be zero for that surface and the critical value l_0 would be given by

$$l_0 = \pi/2.\sqrt{D/A}.$$

If the outer surface is covered by some material, for instance if the transmutation layer is immersed into the earth or into water or covered by some cheap heavy material for instance lead the critical value l_0 is smaller. Accordingly one can economise if an expensive material is used to maintain the chain reaction in the layer by covering that layer and reducing its thickness.

It is important to prevent efficient particles from escaping out of the interior of the inner surface of the spherical layer and also from being absorbed in the interior. If the initial radiation is generated by apparatus placed into the interior of the sphere the material used should be so selected as to lead to a minimum of absorption.

If the thickness is larger than the critical value l_0 I can produce an explosion.

The differential equation which I have given for s ceases to be a good approximation if f is small for instance one or two but gives a fairly good approximation if f is large for instance one or two hundreds.

Some features of described processes are:

1. Production of heat or power or production of radio-active bodies by causing transmutation through exposing elements or mixtures of elements to an electric discharge especially fast cathode rays. The exposure of an element that will yield when bombarded by electrons efficient particles especially neutrons; beryllium being an example.

2. Transmutation as under 1 caused by the penetrating radiation generated by the action of fast electrons on heavy elements like Pb or U (X-rays).

3. The maintainance of a chain reaction in a closed for instance spherical layer, the initial radiation being generated according to 1 or 2 in such a way in the interior of the spherical layer or within the spherical layer itself that efficient particles should not be able to escape through an opening from within the interior space surrounded by the chain reaction layer.

4. The chain reaction layer being surrounded by a large bulk of material which is cheaper than the chain reaction material. The surrounding material being a heavy element like lead or a light element which does not absorb neutrons and which does not convert them into positive particles.

5. The maintainance of chain reactions in a layer forming a closed body for instance a sphere, the thickness of the layer being slightly less than the critical thickness.

Dated this 4th day of July, 1934.
LEO SZILARD.

COMPLETE SPECIFICATION

Improvements in or relating to the Transmutation of Chemical Elements

I, LEO SZILARD, a citizen of Germany, a subject of Hungary, C/o Claremont Haynes & Co., of Vernon House, Bloomsbury Square, London, W.C.1, do hereby declare the nature of this invention and in what manner the same is to be performed, to be particularly described and ascertained in and by the following statement:—

The invention concerns methods and apparatus for the production of nuclear transmutations leading to the generation of radio-active bodies, to the liberation of nuclear energy and the utilisation of the liberated energy.

According to this invention radio active elements or energy or both are generated by means of neutron isotopes produced by means of a chain reaction in a body in which chain reaction neutron isotopes of differing mass number take part. (I have reason to believe that apart from neutrons which carry no charge and have a mass approximately equal to the proton mass heavier isotopes of the neutron exist which particles carry no charge and has a mass number approximately equal to a multiple of the proton mass.)

The generation of radio active bodies by the neutron isotopes may be indirect i.e. these neutron isotopes may generate radiations which do not consist of neutron isotopes and which radiations produce radio active elements.

There are several radiations arising out of chain reaction which may generate radio-active bodies, for instance, radiation consisting of neutrons of mass number 1; radiation consisting of neutrons of mass number higher than 1 (multiple neutrons) and gamma radiation. I wish to make it clear that methods and apparatus for the generation of radio-active bodies by means of neutrons of mass number 1, without chain reactions, in itself is not claimed, and does not form part of the subject matter of this specification. It forms part of and is claimed in my specification number 440,023.

In the chain reactions to be described below, energy is liberated in the form of heat and can be utilized for power production by making use of the heat liberated in the chain reaction. Through the generation of radio-active bodies energy is being stored and gradually liberated in the form radiations which can easily be transformed into heat which heat can be utilised for power production. Furthermore, the energy stored in the form of radio-active bodies can also be more directly utilised for the generation of electricity since radio-active bodies emit electrically charged particles and thereby may directly generate electrical energy.

In the following I shall deal with methods and apparatus for the production of energy and the generation of radio-active bodies by means of chain reactions. In order to maintain such a chain an initial radiation of neutrons may be generated, for instance by one of the methods described in my Specification Number 440,023. If the neutrons enter a space which has the proper shape and size and is filled with the proper combination of elements the energy or the number of the neutrons, or both, can be greatly increased through their interaction with the substance which fills the chain reaction space. The interaction of a neutron with matter can lead to the liberation of a multiple neutron—this multiple neutron liberates in its turn one or more neutrons of mass number 1, which in their turn liberate again multiple neutrons. In this way we can maintain a chain reaction in which a large number of neutrons and multiple neutrons are liberated, the total number being determined by the geometry of the arrangement.

Figs. 1 and 2 show such a chain reaction apparatus. A neutron radiation, the initial radiation, is generated by the high voltage canal ray tube 1, Fig. 1. This tube generates fast deuterons which strike the target 28 which contains deuterium. The neutron radiation emerging from 28 acts on the matter 3 which fills the spherical transmutation space. The composition of this matter 3 will be discussed further below and is such that a chain reaction is released by the neutrons. The pumps 120, 121, and 122, Fig. 2 pump a liquid for instance water or mercury through the pipe systems 107, 110, 111, Figs. 1 and 2 thereby cooling the transmutation area 3. Fig. 1, and driving the heated liquid through the boiler 126, Fig. 2. The boiler may supply steam to a power plant. The neutrons emerging from the sphere 3 act on a layer 9, Fig. 1 which is composed of an element that will transmute into a radio-active body.

An essentially different way of introducing the initial radiation into the chain

reaction chamber is the arrangement shown in Fig. 3. 1 is the cathode ray tube 402 is a sheet of heavy element for instance Pb, or U in which a penetrating radiation (hard X-rays) is generated with good efficiency if the electrons have a voltage of over one million volts. This efficiency increases very rapidly with the voltage, and is much higher than could be expected from the experience based on ordinary X-ray work. The thickness of the sheet 402 is such as to enable the generated penetrating radiation to penetrate through this sheet and act on the transmutation chamber consisting of the layers 407 and 3 (for the cooling of this chamber and the utilisation of the heat generated in it I refer to Fig. 2, 106 in Fig. 3 is to be identified with 106 in Fig. 2). Nevertheless the sheet can be sufficiently thick to utilize more than half the energy of the cathode rays. The X-rays emerging from sheet 402 penetrate the layer 3 and can liberate neutrons either from the layer 3 or from a substance 407 placed in the interior of the layer 3. For instance, if beryllium is present in 407 or in 3, neutrons will be liberated by X-rays. These neutrons can then maintain a chain reaction as discussed further above and further below. The advantage of using X-rays as an initial radiation is the following: The X-rays penetrate through a perfectly closed layer 3 into the interior of the layer and therefore a leak of neutrons from the interior can be avoided.

I shall demonstrate in the following the importance of the shape and the size of the transmutation space. I assume that the chain reaction takes place in a closed spherical layer of material the inner radius (r_1) of which is large compared with the mean free path (a) of the neutrons (or other particles which are involved in maintaining the chain). In the simplest case the density (s) of the neutrons will with good approximation be given as a function of the radius (r) by the following equation:

$$D.\ d(rs)/dr + A.\ (rs) = 0$$

D and A are determined by: the mean free path (a) of the neutrons; the mean velocity of the neutrons w; the factor of the multplicating action f which says how many collisions of a neutron are needed in the average in order to produce one new neutron.

$$A = w/af;\ D = aw/3;\ \sqrt{\frac{D}{A}} = \frac{a\sqrt{f}}{\sqrt{3}}$$

The critical thickness of the spherical layer for which the gradient of the density s vanishes for the internal radius (r_1) has a bearing on the present invention as will now be shown. If the thickness of the spherical layer ($r_2 - r_1$) r_2 and r_1 are the external and internal radii respectively) approaches a certain critical thickness L one can maintain with a very weak source of initial radiation in the interior of the inner surface of the spherical layer a very strong chain reaction and one can easily get one thousand or more times more neutrons emerging from the chain reaction layer than the number of the neutrons forming the initial radiation. If the outer surface ($r = r_2$) of the spherical layer were to stand free in space the density s would be zero for that surface and the critical value L would be given by

$$L = \pi/2\sqrt{D/A}.$$

If the outer surface is covered by some material, for instance if the transmutation layer is immersed in water or other hydrogen containing substance or covered by lead the critical value L is reduced. This is due to the back scattering by water or lead and also to the fact that the neutrons are slowed down in the water and their mean free path is thereby reduced.

It is important to prevent neutrons from escaping out of the interior of the inner surface of the spherical layer and also from being absorbed in the interior. If the initial radiation is generated by apparatus placed in the interior of the sphere the material used should be so selected as to lead to a minimum of absorption.

If the thickness of the layer is larger than the critical thickness L the number of neutrons would go on increasing indefinitely and such an increase is only stopped when the heat which is liberated in the process causes the spherical layer to explode.

The differential equation which I have given above and from which we have derived the value for the critical thickness L does not give the correct description of the density of the neutrons in a chain reaction nor does it give the correct value for L. In order to get the correct equation we have obviously to distinguish between the mean free path a of the neutron for a collision and its factor f which says how many collisions of a neutron are needed in the average in order to produce a multiple neutron on the one hand, and on the other hand between the mean free path a_2 of the multiple neutron and its factors f_2 and f_3 of its multiplying action which says how many

collisions on the average of the multiple neutron are needed in order to produce one or two new neutrons respectively etc. The only purpose of putting down the above simplified equations was to demonstrate the general type of behaviour of chain reactions with multiplying action and to show the existence of a critical thickness L. The simplified equation is an approximation of the correct equation if many collisions of the neutron are needed to generate a multiple neutron but few collisions of the multiple neutron are needed to generate two neutrons.

I shall now discuss the composition of the matter in which the chain reaction is to be maintained. It is essential that two isotopes of the neutron should take part in the reaction in order to obtain a chain. (Neutron isotopes are particles which have no charge and the mass of which is roughly equal to the mass of the proton or a multiple thereof. I have reason to believe that heavy neutron isotopes, the mass of which is approximately a multiple of the proton mass exist).

A mixture of two elements "E" and "F" can be so chosen that element "F" (the converter element) when it reacts with a simple neutron should transmute into an element the mass number of which is lower and generate a multiple neutron; on the other hand element "E" (the reducer element) should when it reacts with a multiple neutron transmute into an element the mass number of which is increased and generate a simple neutron. In order to have a chain reaction in which the number of neutrons increases it is necessary that apart from the converter and the reducer element there should be present a multiplicator element that is to say one from which neutrons are liberated by neutrons in a process in which the interacting neutron is not captured or alternatively a multiplicator element which generates two neutrons from a multiple neutron.

I wish to give the following indication of which elements may be used as converter "F": The fact that an element ejects a multiple neutron, for instance a tetra neutron (a neutron of mass number 4), when bombarded by simple neutrons, can be revealed in certain circumstances by the fact that it becomes radio-active through neutron bombardment, and that the generated radio-active element is an isotope of the bombarded element itself. For instance, if indium is bombarded by fast neutrons (of less than 8 M.E.V. energy, but more than 100,000 E.V. energy) a radio-active isotope of indium is generated, which decays with a 4½ h. period. This indicates that one stable indium isotope captures a neutron, and a multiple neutron is ejected, leading to a radio-active indium isotope of mass number 112. A radio-active indium isotope of mass number 112 arises if the stable indium isotope 115 captures the neutron and ejects a tetra neutron. Only very few elements will eject a tetra neutron when bombarded by very slow neutrons. The number of elements which can eject a tetra neutron increases with the kinetic energy of the bombarding simple neutron. Not all the elements reveal this fact by an appreciable radio-activity, therefore a more general method can be employed to investigate each element separately. This more general method is based on the detection of the ejected tetra neutron. The ejected tetra neutron can be detected through the transmutation which it causes in various elements which are exposed to it. Such transmutations reveal their presence in two different ways; either through radio-activity induced in the element which is exposed to the tetra neutron, or through the ejection of charged particles (proton or alpha-particle etc.), from the element which is exposed to the tetra neutron. The ejection of such charged particles can be observed by means of an ionization chamber, a Wilson cloud chamber or a photographic plate which contains the element, which transmutes when exposed to the tetra neutron.

I further wish to give some indication as to which elements may be used as reducer element "E," from which a multiple neutron liberates a simple neutron, and a multiplicator element, from which a multiple neutron liberates two simple neutrons.

A lower limit for the mass of the tetra neutrons can be deduced from considering two radio-active elements, of which the lighter one arises from the heavier one, through two beta transformations and one alpha transformation. If the mass of the tetra neutron were smaller than the mass differences of these two radio-active elements, the heavier elements would spontaneously have to eject the tetra neutron, and would thus spontaneously transmute into the lighter element.

By applying this consideration to the known radio-active elements, we obtain as a lower limit for the mass of the tetra neutron about 4.014. While the slow neutron will eject a tetra neutron from only few elements, a tetra neutron having such a high mass will eject a neutron from most of the elements and will eject two neutrons from a number of elements. In order to determine from which

elements it ejects two neutrons (multiplicator elements) we have to take each element in its turn, bombard it with tetra neutrons and either observe the number of simple neutrons which emerge, or observe the radio-activity induced in the bombarded element, and thereby identify the nature of this transmutation. Examples of multiplicator elements are beryllium, and certain heavy elements. Heavy multiplicator elements are as a rule preferable since they will emit no, or few, positively charged particles, and we can thereby avoid interruptions of the chain.

Other examples for elements from which neutrons can liberate multiple neutrons are uranium and bromine.

The value of the critical thickness "L" previously referred to, can be estimated for a spherically symmetrical body as follows: The mean free path for an elastic collision of the neutron is in many elements of the order of 5 cms. Every hundredth elastic collision may lead to the ejection of a tetra neutron, and every collision of the tetra neutron (mean free path of the order of 5 cms) may lead to the ejection of two simple neutrons. In these circumstances "L" will be of the order of magnitude of 50 cm.

By maintaining chain reaction in combination with means for leading away and utilizing the heat set free in the transmutation process energy can be produced and utilized for power production.

Having now particularly described and ascertained the nature of my said invention and in what manner the same is to be performed, I declare that what I claim is:—

1. A method of generating radio-active elements or energy or both by means of neutron isotopes produced by means of a chain reaction in a body in which chain reaction neutron isotopes of differing mass number take part.

2. A method according to Claim 1 characterised by a chain reaction in which a neutron of mass number 1 and a heavier neutron isotope take part.

3. A method according to Claim 1 or 2 characterised by the generation of an initial radiation which can consist of neutrons of mass number 1, and the exposure to this initial radiation of a body so composed that a chain reaction is caused by the initial radiation.

4. A method according to Claims 1, 2 or 3 characterised by the said body containing a converter element and a reducer element.

5. A method according to Claims 1, 2 or 3 characterised by the said body containing a converter element and a multiplicator element.

6. A method according to Claims 1, 2, or 3 characterised by the said body containing a converter, a reducer and a multiplicator element.

7. A method according to Claims 1, 2 or 3 characterised by the said body containing beryllium.

8. A method according to Claims 1, 2 or 3 characterised by the exposure of an element to the radiations generated in the said body which element transmutes into a radio-active element under the influence of the radiations generated by the chain reaction.

9. A method according to Claims 1, 2 or 3 characterised by the use of a hydrogen-containing substance, for instance water, for scattering the neutrons, for example by surrounding by water the whole body in which the transmutation takes place.

10. Improvements in or relation to the transmutation of chemical elements by means of a chain reaction as hereinbefore described and illustrated in the accompanying drawings.

11. An apparatus for carrying out the methods claimed in any of the Claims 1 to 9 substantially as hereinbefore described in the specification and shown in the accompanying drawings.

Dated the 9th day of April, 1935.
CLAREMONT HAYNES & CO.,
Vernon House, Sicilian Avenue,
Bloomsbury Square, W.C.,
Applicants Solicitors.

Leamington Spa: Printed for His Majesty's Stationery Office, by the Courier Press.—1949.
Published at The Patent Office, 25, Southampton Buildings, London, W.C.2, from which copies, price 2s. 0d. each (inland) 2s. 1d. (abroad) may be obtained.

[This Drawing is a reproduction of the Original on a reduced scale.]

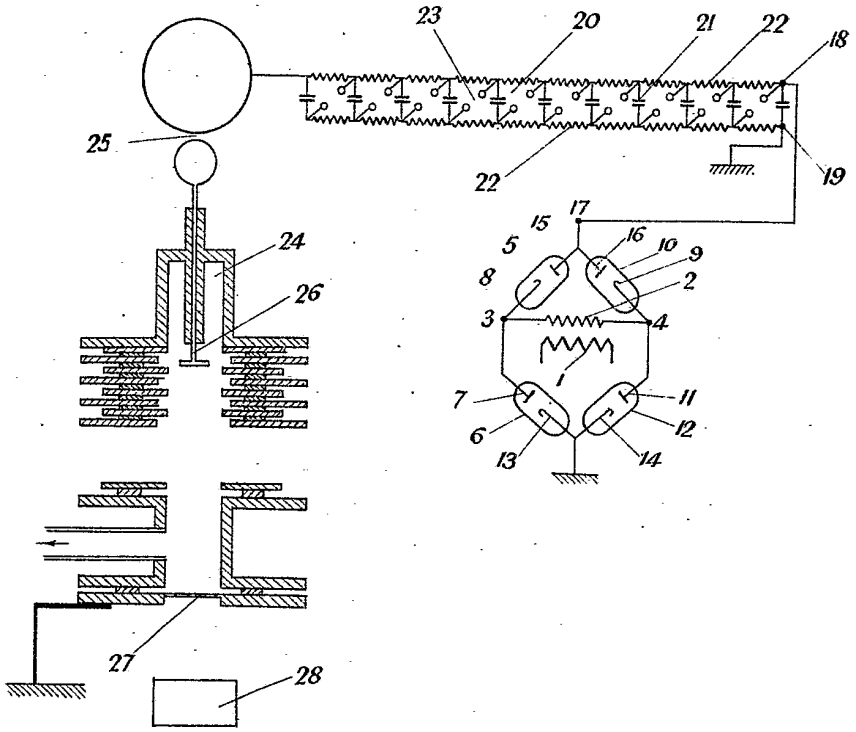

FIG. 1

[This Drawing is a reproduction of the Original on a reduced scale.]

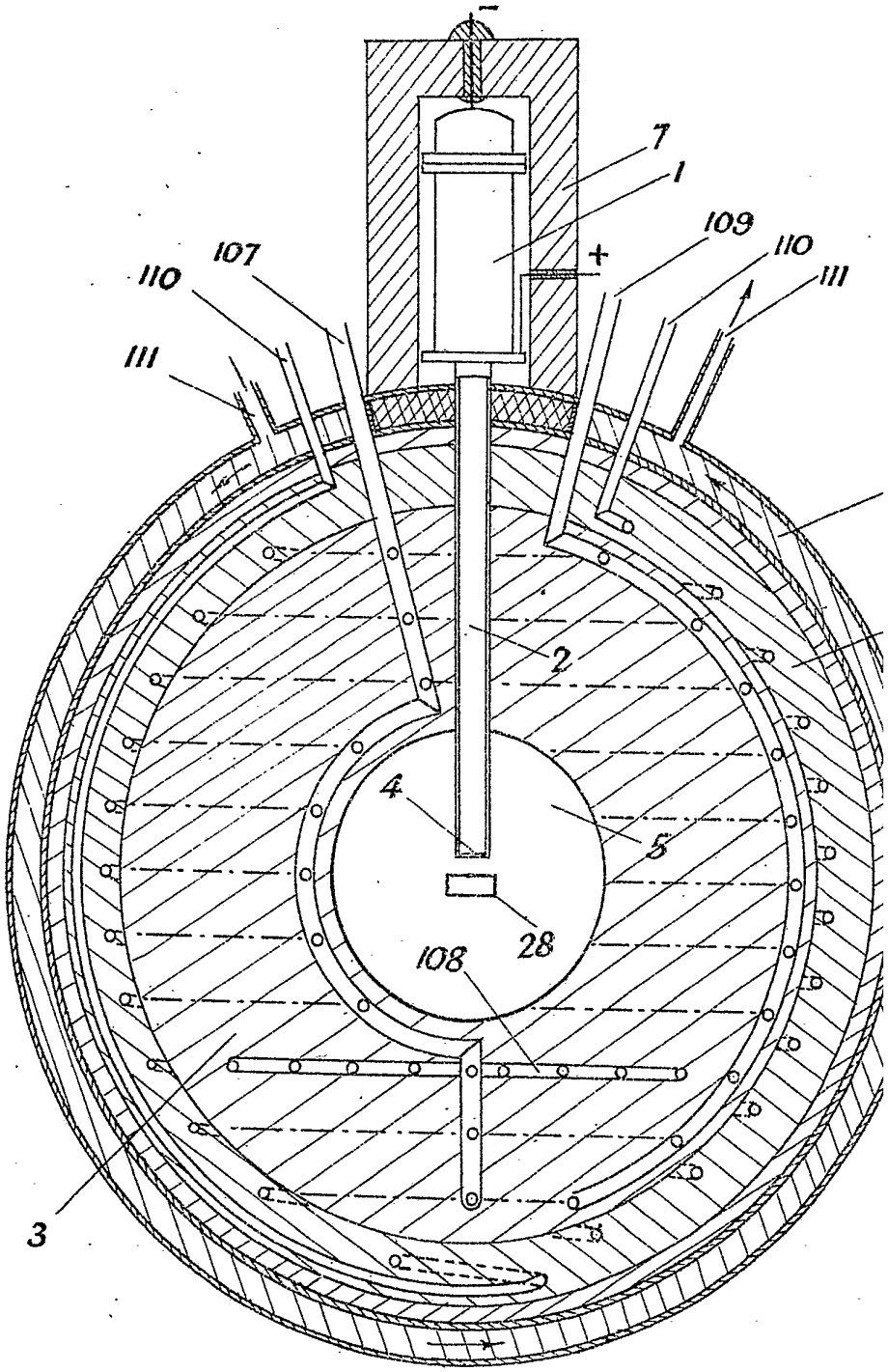

FIG. 2

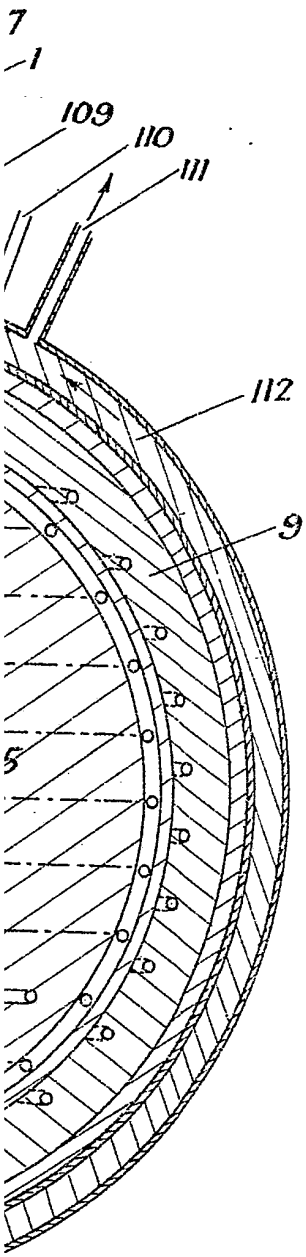

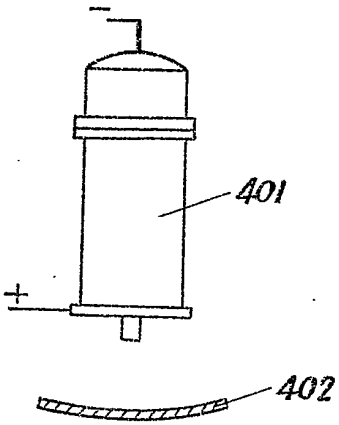

Fig 3

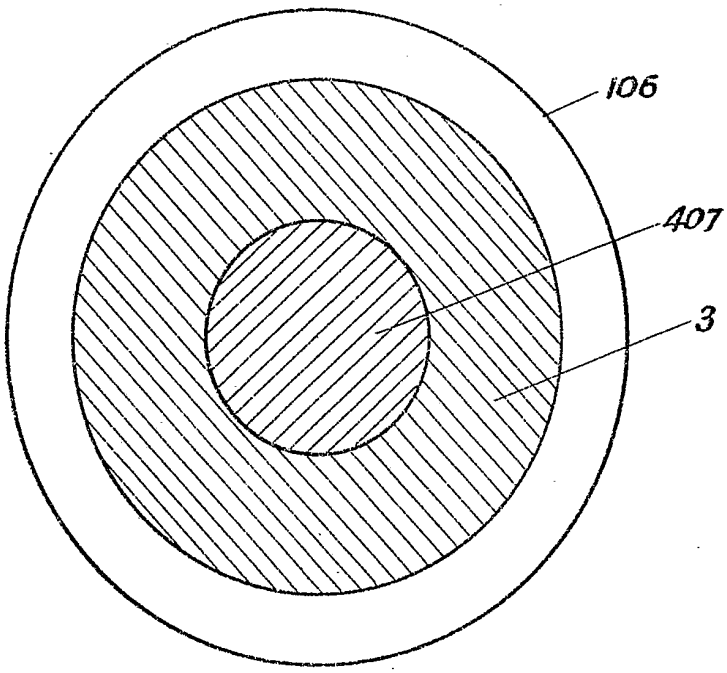

FIG. 4

[This Drawing is a reproduction of the Original on a reduced scale.]

SHEET 2

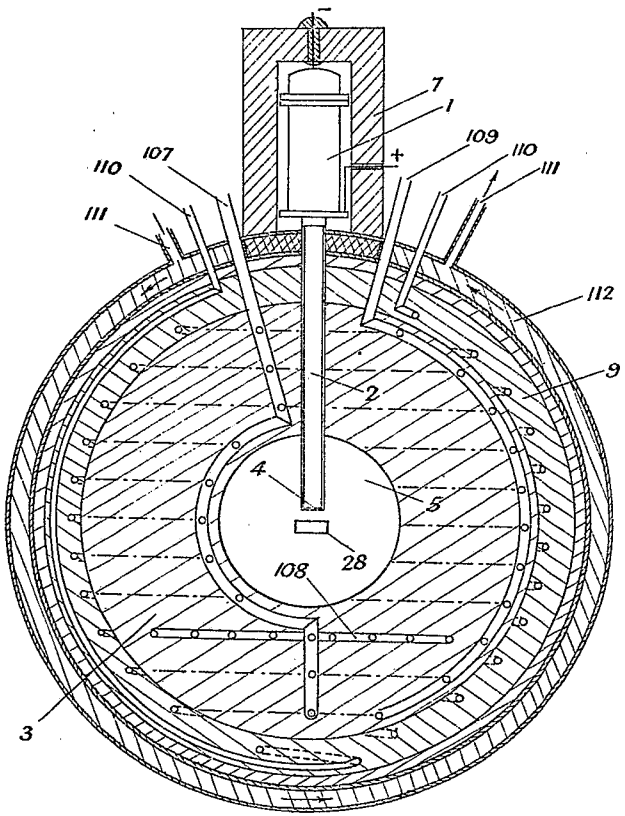

FIG. 2

SHEET 3

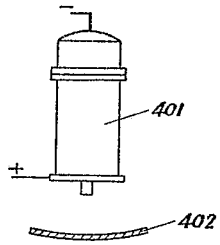

Fig 3

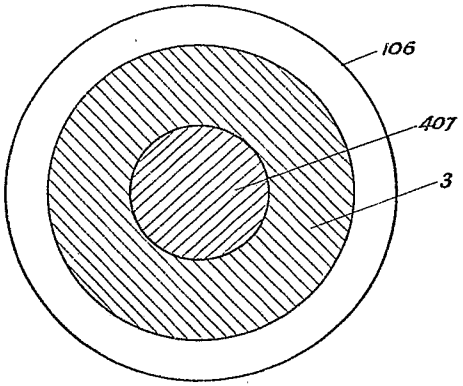

FIG. 4

[This Drawing is a reproduction of the Original on a reduced scale.]

Fig. 1.

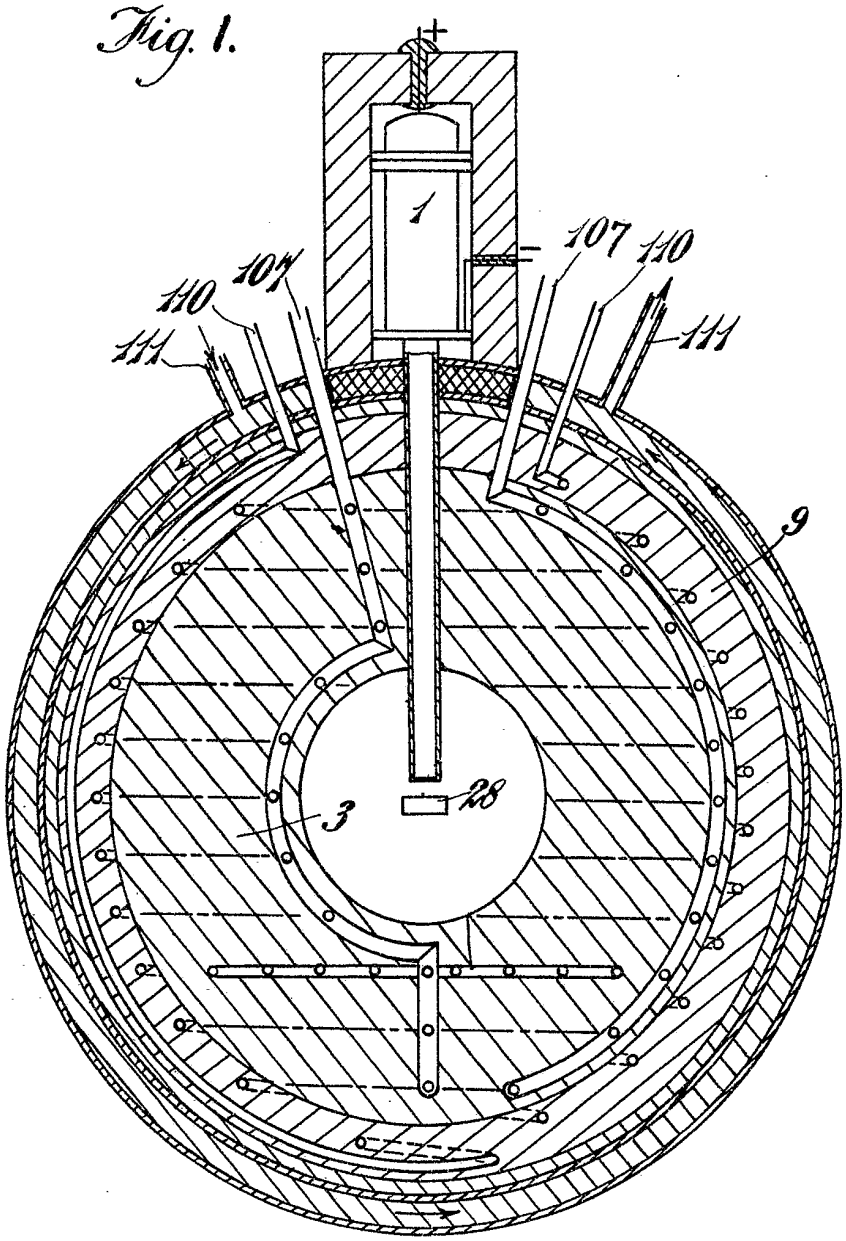

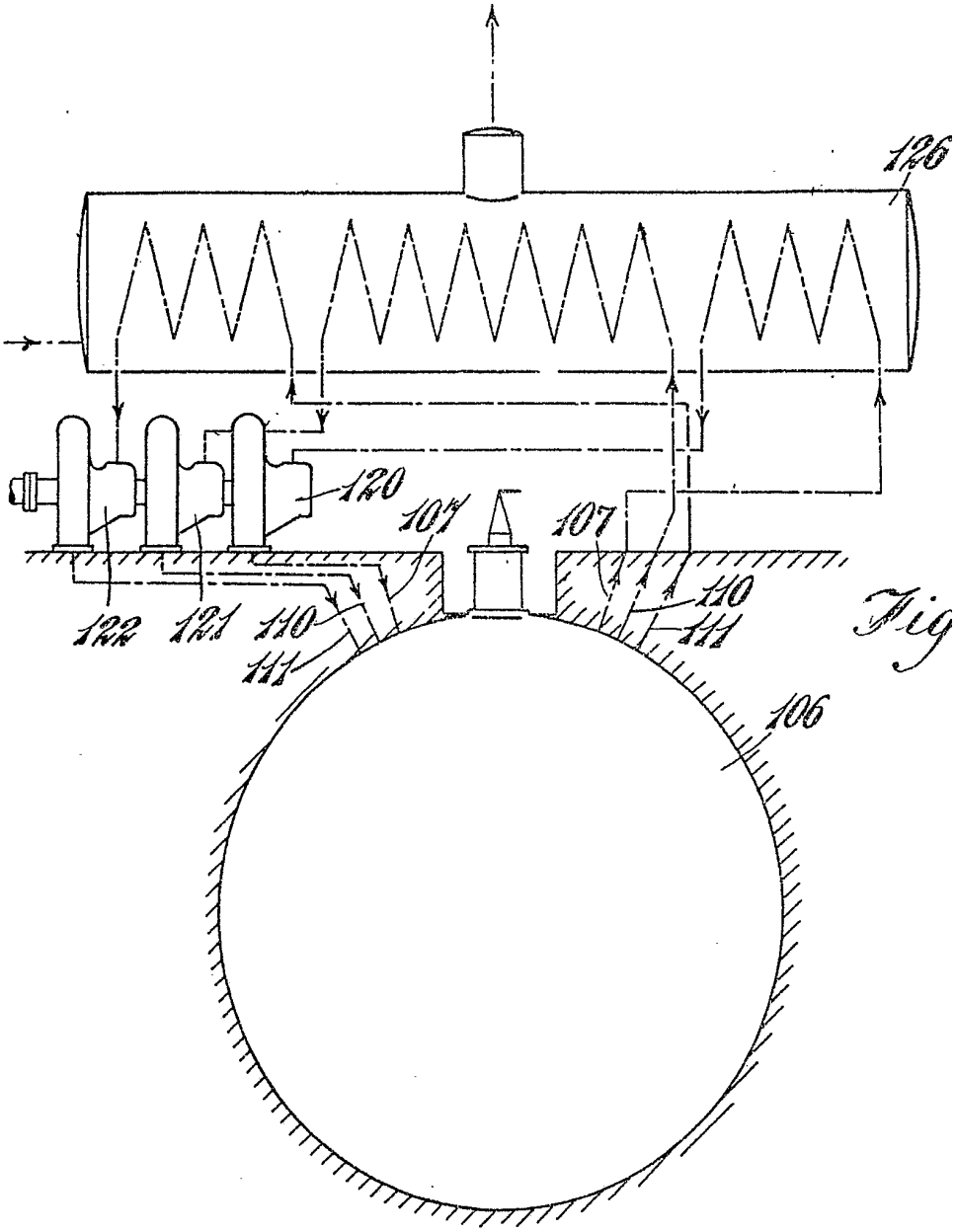

Fig

[This Drawing is a reproduction of the Original on a reduced scale.]

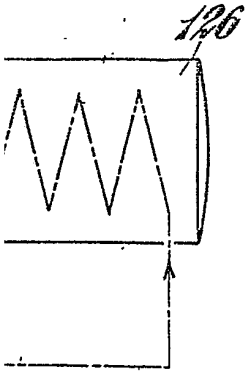

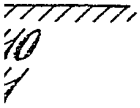

Fig. 2

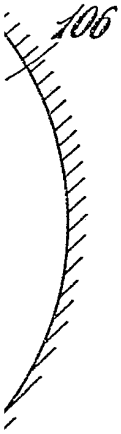

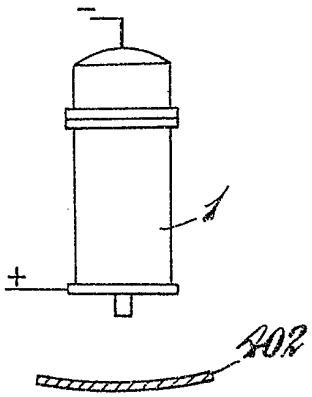

Fig. 3.

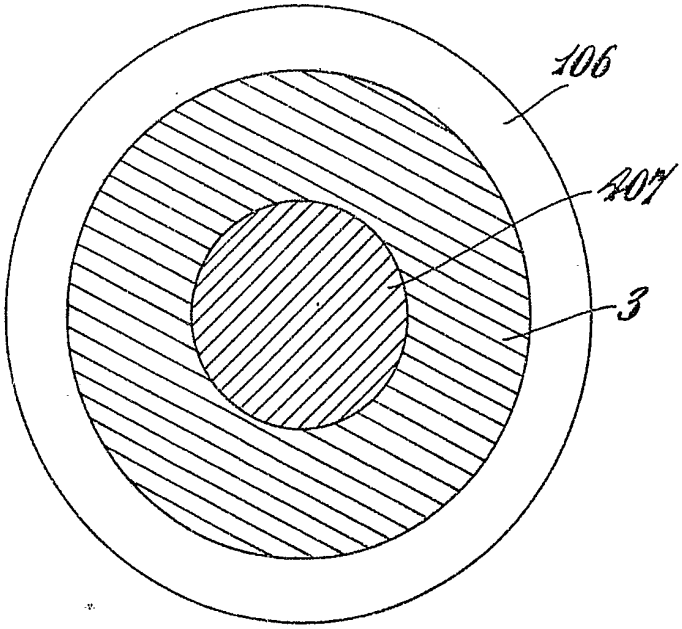

[This Drawing is a reproduction of the Original on a reduced scale.]

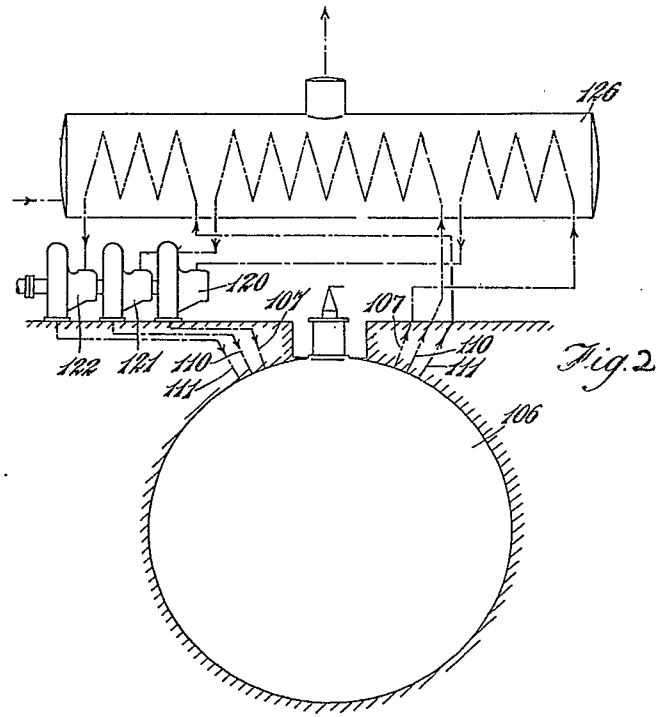

Fig. 2

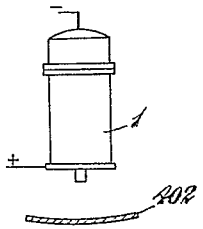

Fig. 3.

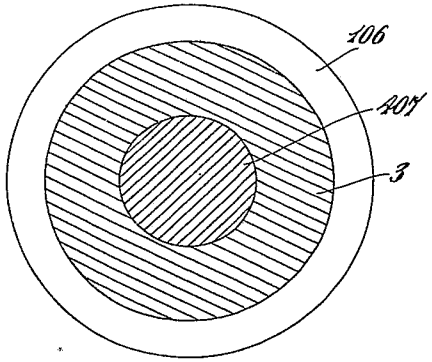

[This Drawing is a reproduction of the Original on a reduced scale.]

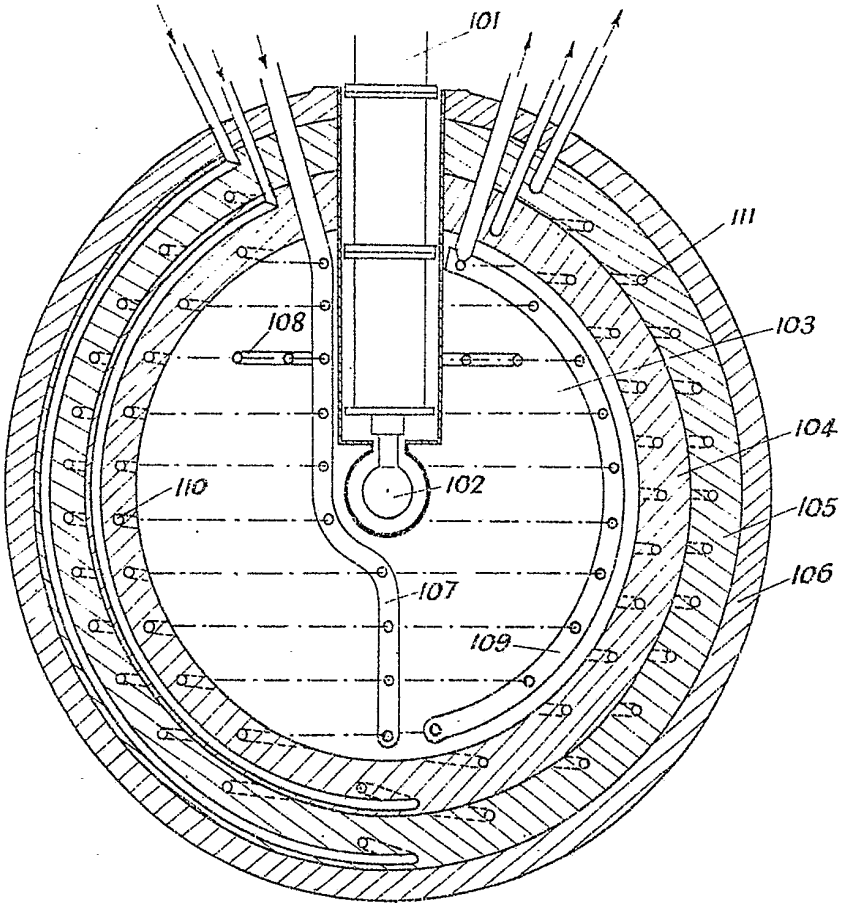

FIG. 1

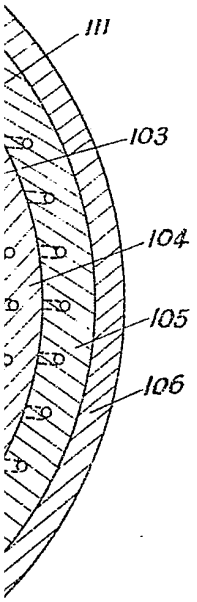
111
103
104
105
106

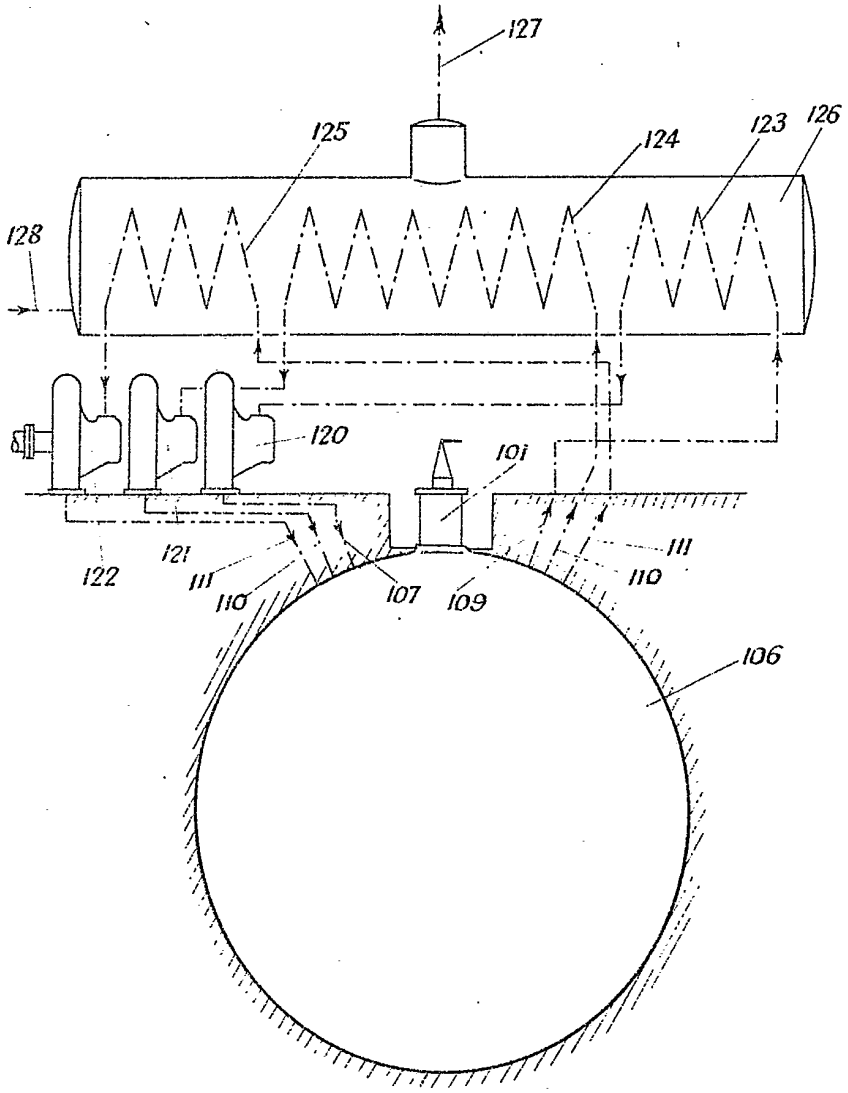
127
125
124
123
126
128
120
101
122
121
111
110
107
109
111
110
106

FIG. 2

[This Drawing is a reproduction of the Original on a reduced scale.]

SHEET 1

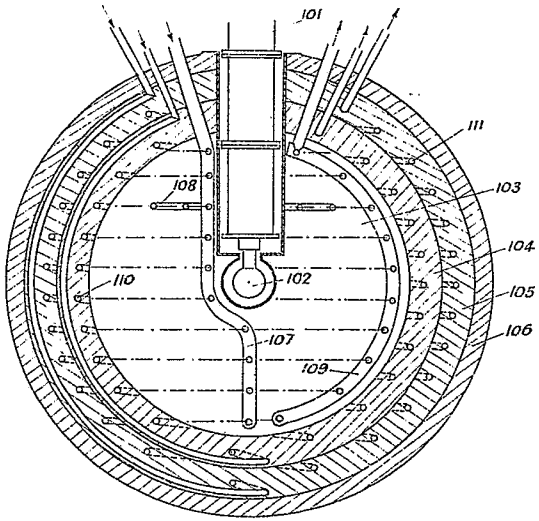

FIG. 1

SHEET 2

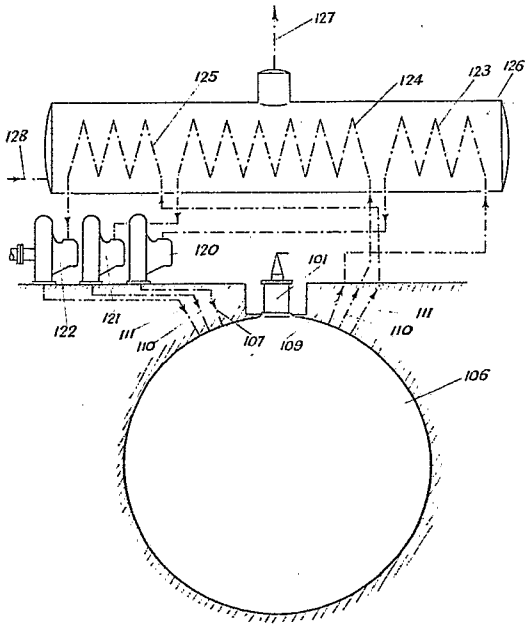

FIG. 2